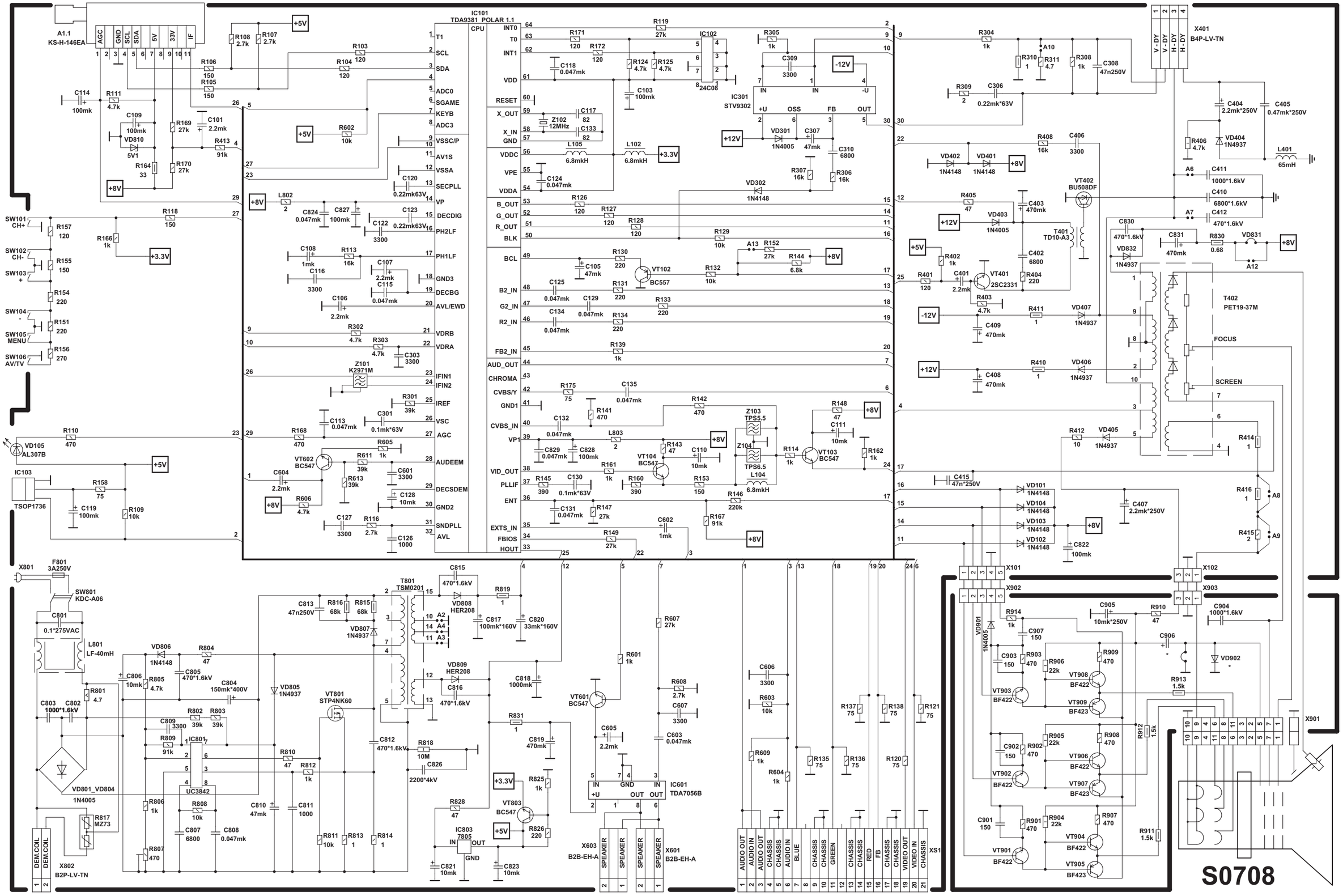
A1.1
KS-H-146EA
AGC
GND
SCL
SDA
5V
33V
IF
IC101
TDA9381 POLAR 1.1
CPU
T1
SCL
SDA
ADC0
SGAME
KEYB
ADC3
VSSC/P
AV1S
VSSA
SECPLL
VP
DECDIG
PH2LF
PH1LF
GND3
DECBG
AVL/EWD
VDRB
VDRA
IFIN1
IFIN2
IREF
VSC
AGC
AUDEEM
DECSDEM
GND2
SNDPLL
AVL
INT0
T0
INT1
VDD
RESET
X_OUT
X_IN
GND
VDDC
VPE
VDDA
B_OUT
G_OUT
R_OUT
BLK
BCL
B2_IN
G2_IN
R2_IN
FB2_IN
AUD_OUT
CHROMA
CVBS/Y
GND1
CVBS_IN
VP1
VID_OUT
PLLIF
ENT
EXTS_IN
FBIOS
HOUT
IC102
24C08
IC301
STV9302
IN
OSS
FB
OUT
-U
+U
X401
B4P-LV-TN
V - DY
H - DY
T402
PET19-37M
FOCUS
SCREEN
VT402
BU508DF
T401
TD10-A3
VT401
2SC2331
VT102
BC557
VT103
BC547
VT104
BC547
VT601
BC547
VT602
BC547
VT803
BC547
Z101
K2971M
Z102
12MHz
Z103
TPS5.5
Z104
TPS6.5
L104
6.8mkH
VD105
AL307B
IC103
TSOP1736
SW101
CH+
SW102
CH-
SW103
+
SW104
-
SW105
MENU
SW106
AV/TV
X801
F801
3A250V
SW801
KDC-A06
C801
0.1*275VAC
L801
LF-40mH
VD801_VD804
1N4005
X802
B2P-LV-TN
DEM.COIL
T801
TSM0201
VT801
STP4NK60
UC3842
IC803
7805
IC601
TDA7056B
X603
B2B-EH-A
X601
B2B-EH-A
SPEAKER
XS1
AUDIO OUT
AUDIO IN
CHASSIS
BLUE
GREEN
RED
FB
VIDEO OUT
VIDEO IN
X101
X902
X102
X903
X901
VT908
BF422
VT909
BF423
VT903
BF422
VT906
BF422
VT907
BF423
VT902
BF422
VT904
BF422
VT905
BF423
VT901
BF422
S0708